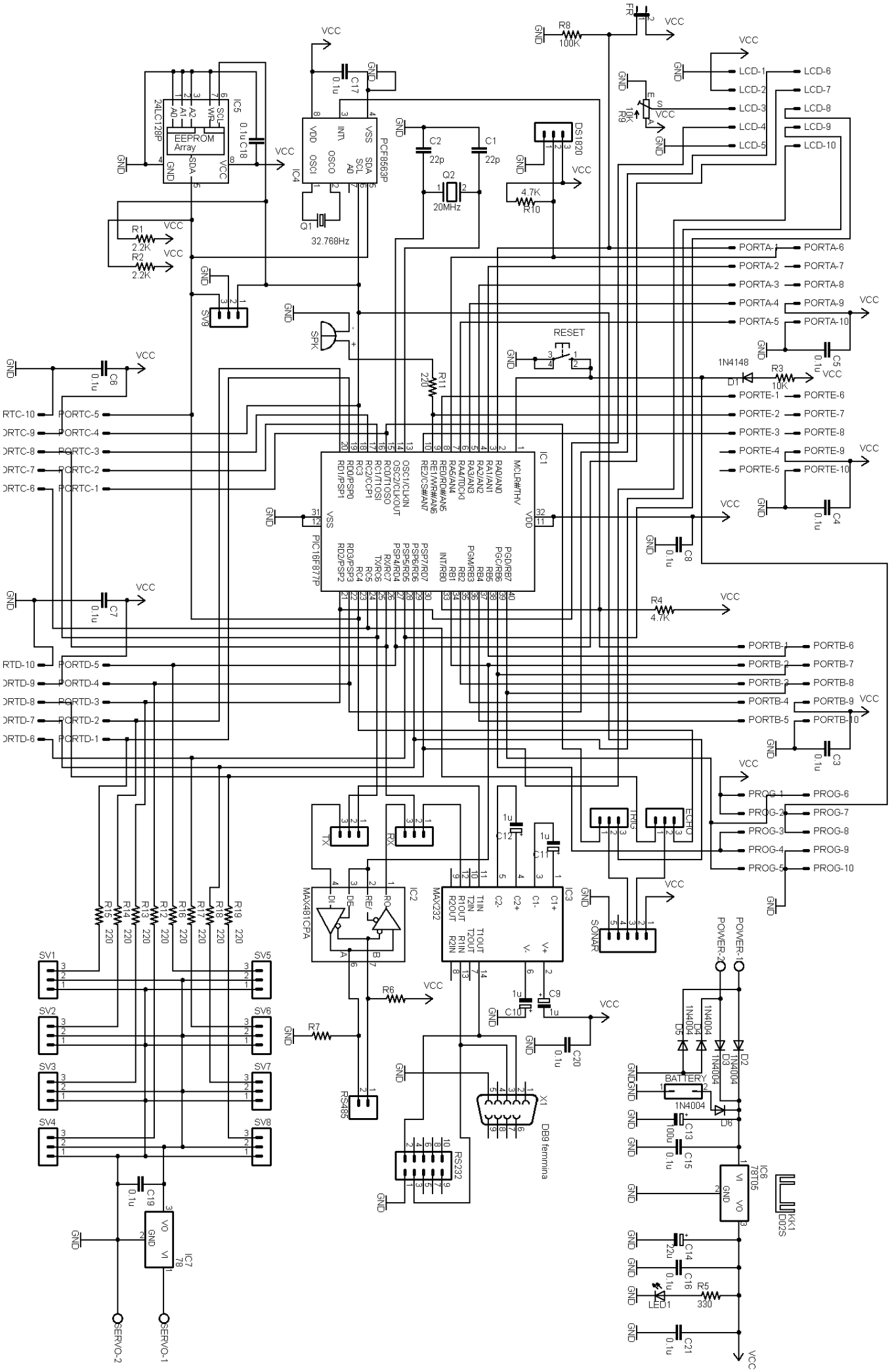
IC1
PIC16F877P
IC4
PCF8563P
IC5
24LC128P
EEPROM Array
IC2
MAX481CPA
IC3
MAX232
IC6
78T05
IC7
78
X1
DB9 femmina
KK1
D02S
BATTERY
SPK
RESET
DS1820
Q1
32.768Hz
Q2
20MHz
LED1
SONAR
TRIG
ECHO
TX
RX
RS485
RS232
SERVO-1
SERVO-2
POWER-1
POWER-2
PORTA-1
PORTA-2
PORTA-3
PORTA-4
PORTA-5
PORTA-6
PORTA-7
PORTA-8
PORTA-9
PORTA-10
PORTB-1
PORTB-2
PORTB-3
PORTB-4
PORTB-5
PORTB-6
PORTB-7
PORTB-8
PORTB-9
PORTB-10
PORTC-1
PORTC-2
PORTC-3
PORTC-4
PORTC-5
PORTD-1
PORTD-2
PORTD-3
PORTD-4
PORTD-5
PORTE-1
PORTE-2
PORTE-3
PORTE-4
PORTE-5
PORTE-6
PORTE-7
PORTE-8
PORTE-9
PORTE-10
LCD-1
LCD-2
LCD-3
LCD-4
LCD-5
LCD-6
LCD-7
LCD-8
LCD-9
LCD-10
PROG-1
PROG-2
PROG-3
PROG-4
PROG-5
PROG-6
PROG-7
PROG-8
PROG-9
PROG-10
SV1
SV2
SV3
SV4
SV5
SV6
SV7
SV8
VCC
GND
R1 2.2K
R2 2.2K
R3 10K
R4 4.7K
R5 330
R6
R7
R8 100K
R9 10K
R10 4.7K
R11 220
R15 220
R16 220
R17 220
R18 220
R19 220
C1 22p
C2 22p
C3 0.1u
C4 0.1u
C5 0.1u
C6 0.1u
C7 0.1u
C8 0.1u
C9 1u
C10 1u
C11 1u
C12 1u
C13 100u
C14 22u
C15 0.1u
C16 0.1u
C17 0.1u
C18 0.1u
C19 0.1u
C20 0.1u
C21 0.1u
D1 1N4148
D2 1N4004
D3 1N4004
D4 1N4004
D5 1N4004
D6 1N4004